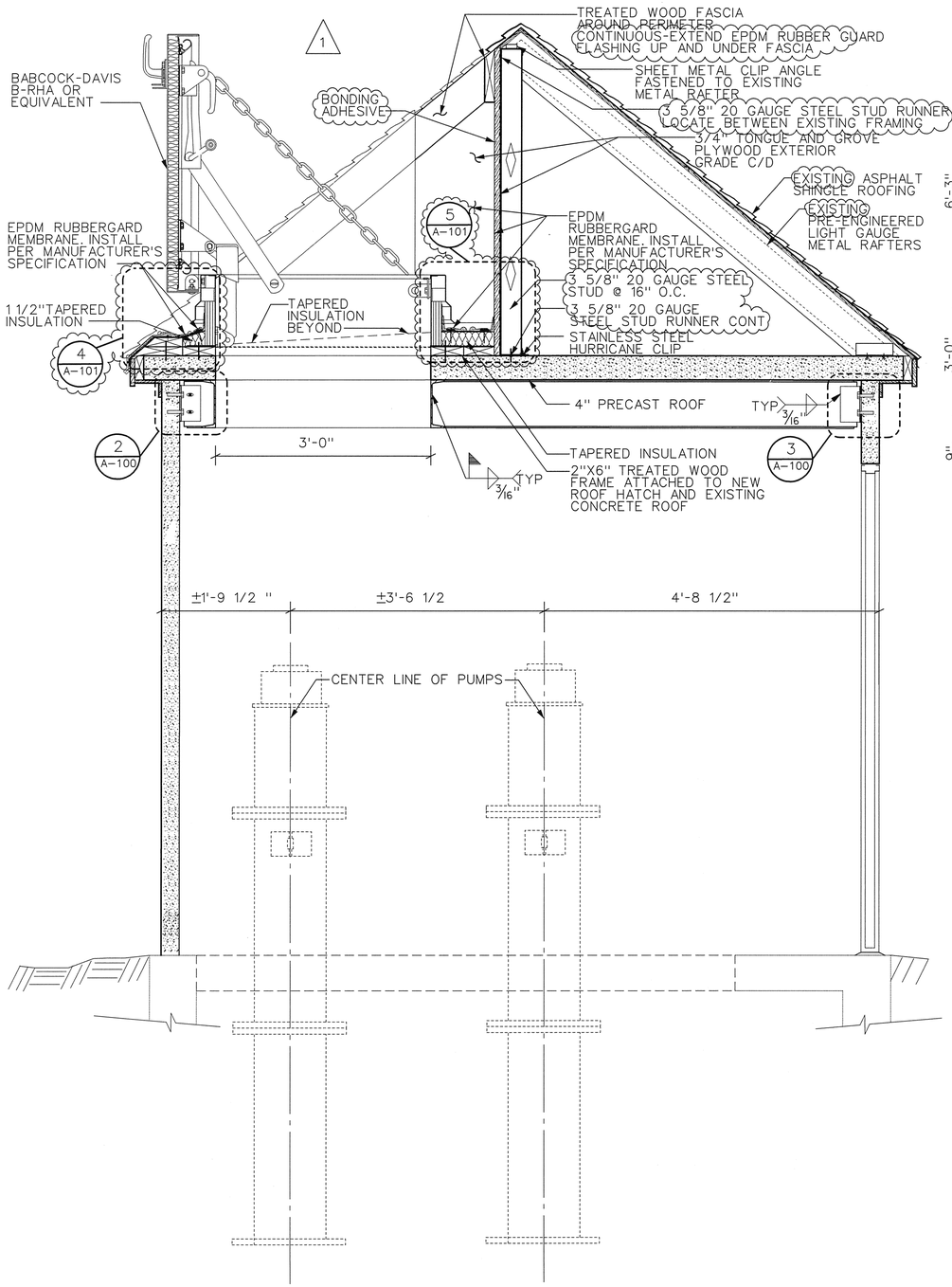

SECTION 1 / A-100
SCALE: 1"= 1'-0"

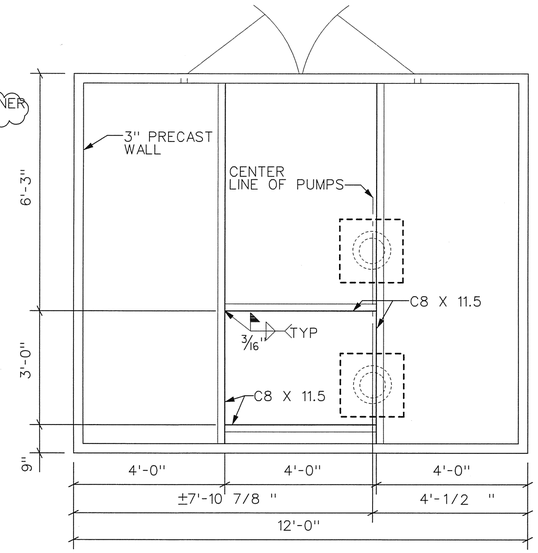

CEILING PLAN B / A-100
SCALE: 1/2"= 1'-0"

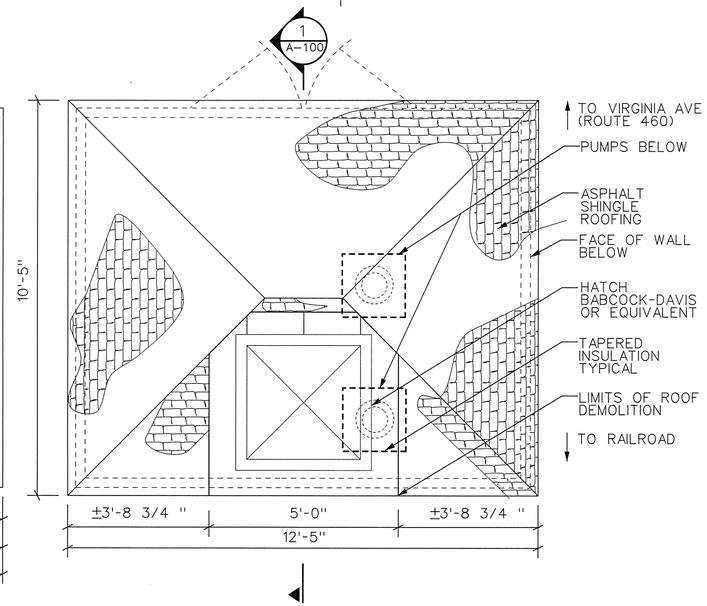

ROOF PLAN A / A-100
SCALE: 1/2"= 1'-0"

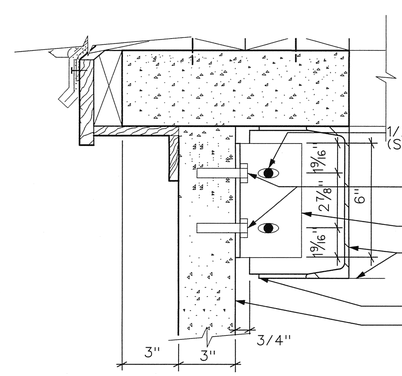

CONNECTION DETAIL 2 / A-100
SCALE: 3"= 1'-0"

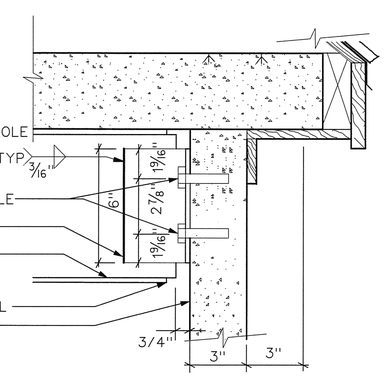

CONNECTION DETAIL 3 / A-100
SCALE: 3"= 1'-0"

Wiley & Wilson
Employee-Owned
2310 Langhorne Road
Lynchburg, VA 24501-1547
434.947.1901
www.wileywilson.com

COMMONWEALTH OF VIRGINIA
Brian A. Riddle
Lic. No. 42541
2/4/08
PROFESSIONAL ENGINEER

ROOF MODIFICATIONS FOR WEST CREWE PUMP STATATION BURKEVILLE, VIRGINIA

MRK	DATE	REVISION DESCRIPTION
1	02/04/08	REVISIONS PER STATE REVIEW

COMM NO: 207202.10
DATE: JANUARY 11, 2008
DRAWN: JCP | DESIGN: CAR
CHECK:
CAD FILE: 207202_A01.DGN
SHEET TITLE
WEST CREWE PUMP STATION ROOF MODIFICATIONS

SHT. NO. A-100 | REV. NO. 1